BCX53-16Q

SOT-89 PNP Bipolar Transistor
SOT-89 PNP 双极型三极管

1. Description 描述

This PNP medium-power Bipolar Junction Transistor (BJT) is suitable for automotive applications.
这款 PNP 型中功率双极结型晶体管（BJT）适用于汽车电子应用领域。

2. Features 特性

Feature 特性	Description 描述
Collector-Emitter Breakdown Voltage 集电极-发射极击穿电压	$BV_{CEO} > -80V$
Continuous Collector Current 连续集电极电流	$I_C = -1\text{A}$
Complementary NPN Types 互补 NPN 类型	BCX56-16Q
Applications 应用	• Automotive Applications 汽车应用 • Medium Power Switching or Amplification Applications 中功率开关或放大应用 • AF Drivers and Output Stages AF 驱动器与输出级
Environmental Compliance 环保合规	Totally Lead-Free & Fully RoHS Compliant. 完全无铅和符合 RoHS 标准[1] Halogen and Antimony Free, "Green" Device. 无卤素、无锑，“绿色”器件[2]
Automotive Compliance 汽车合规	AEC-Q101 qualified. 通过了 AEC-Q101 认证。

[1] No purposely added lead. Fully EU Directive 2002/95/EC (RoHS), 2011/65/EU (RoHS 2) & 2015/863/EU (RoHS 3) compliant.
无铅，完全符合欧盟标准 2002/95/EC（RoHS），2011/65/EU （RoHS 2）和 2015/863/EU （RoHS 3）。

[2] Halogen- and Antimony-free "Green" products are defined as those which contain <900ppm bromine, <900ppm chlorine (<1500ppm total Br + Cl) and <1000ppm antimony compounds.
无卤素和无锑的“绿色”产品指溴含量<900ppm，氯含量<900ppm（溴+氯总含量<1500ppm）和锑化合物含量<1000ppm。

© JPHL 2025. All rights reserved

3. Mechanical Data 封装数据

Feature 特性	Description 描述
Package 封装	SOT-89
Moisture Sensitivity Level 湿敏感度等级	J-STD-020 MSL1
Material 材料	Molded Plastic, “Green” Molding Compound; UL Flammability Classification Rating 94V-0. 模塑塑料封装，“绿色”成型复合材料；UL 可燃性等级 94V-0。
Dimensions 尺寸	$1.5mm$ pitch; $4.5mm \times 2.5mm \times 1.5mm$ body 相邻引脚中心距为 $1.5mm$，封装本体（不含引脚）尺寸为 $4.5mm \times 2.5mm \times 1.5mm$
Terminals Compliance 引脚合规	3 terminals, Tin Plated Leads; exposed die pad for good heat transfer; Solderable per MILSTD-202, Method 208ⓔ3 3 个镀锡引脚；外露散热焊盘以增强热传导；可焊性符合 MIL-STD-202 标准中 208 方法 e3 条款的要求
Weight 重量	0.055 grams (Approximate) 约 0.055 克
Polarity 极性	See Diagrams Below 极性见下图

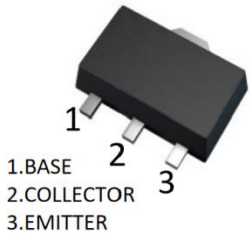

SOT-89 Top View

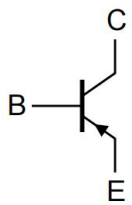

Device Symbol

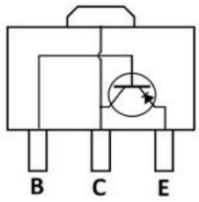

Top View Pin-Out

4. Ordering Information 订购信息

Part Number	Compliance	Package	Reel Size (inches)	Tape Width (mm)	Quantity Per Reel
BCX53-16Q	Automotive	SOT-89	7	12	1000

5. Marking Information 丝印信息

Part Number	Marking Code
BCX53-16Q	AL

© JPHL 2025. All rights reserved

6. Absolute Maximum Ratings(T_a =+ 25℃) 绝对最大额定值

Characteristic 特性	Symbol 符号	Value 值	Unit 单位
Collector-Base Voltage 集电极-基极电压	V_{CBO}	-100	V
Collector-Emitter Voltage 集电极-发射极电压	V_{CEO}	-80	V
Emitter-Base Voltage 发射极-基极电压	V_{EBO}	-5	V
Collector Current 集电极电流	I_C	-1	A

7. Thermal Characteristics(T_a =+ 25℃) 热特性

Characteristic 特性	Symbol 符号	Value 值	Unit 单位
Collector Power Dissipation 集电极耗散功率	P_c	500	mW
Thermal Resistance From Junction To Ambient 结到环境的热阻	$R_{\theta JA}$	250	℃/W
Junction Temperature 结温	T_J	-55 ~ +150	℃
Storage Temperature 储藏温度	T_{stg}	-55 ~ +150	℃

8. ESD Ratings ESD 评级

Characteristic 特性	JEDEC Class JEDEC 等级	Value 值	Unit 单位
Electrostatic Discharge-Human Body Model（ESD HBM） 人体放电模型	3A	4000	V
Electrostatic Discharge-Machine Model（ESD MM） 带电器件模型	C	400	V

© JPHL 2025. All rights reserved

9. Electrical Characteristics(T_a =+ 25℃) 电特性

Characteristic 特性	Symbol 符号	Min. 最小值	Typ. 典型值	Max. 最大值	Unit 单位	Conditions 条件
Collector-Base Breakdown Voltage 集电极-基极击穿电压	BV_{CBO}	-100	-	-	V	$I_C =- 100\mu A,\ I_E = 0$
Collector-Emitter Breakdown Voltage 集电极-发射极击穿电压[3]	BV_{CEO}	-80	-	-	V	$I_C =- 10mA,\ I_B = 0$
Emitter-Base Breakdown Voltage 发射极-基极击穿电压	BV_{EBO}	-5	-	-	V	$I_E =- 100\mu A,\ I_C = 0$
Collector-Base Cut-Off Current 集电极-基极漏电流	I_{CBO}	-	-	-100	nA	$V_{CB} =- 30V,\ I_E = 0$
Emitter-Base Cut-Off Current 发射极-基极漏电流	I_{EBO}	-	-	-100	nA	$V_{EB} =- 5V,\ I_C = 0$
DC Current Gain 直流电流增益[3]	h_{FE}	63	-	-	-	$V_{CE} =- 2V$, $I_C =- 5mA$
DC Current Gain 直流电流增益[3]	h_{FE}	100	-	250	-	$V_{CE} =- 2V$, $I_C =- 150mA$
DC Current Gain 直流电流增益[3]	h_{FE}	40	-	-	-	$V_{CE} =- 2V$, $I_C =- 500mA$
Collector-Emitter Saturation Voltage 集电极-发射极饱和压降[3]	$V_{CE(sat)}$	-	-	-0.5	V	$I_C =- 500mA$, $I_B =- 50mA$
Base-Emitter Saturation Voltage 基极-发射极饱和电压[3]	$V_{BE(sat)}$	-	-	-1	V	$I_C =- 500mA$, $I_B =- 50mA$
Transition Frequency 特征频率	f_T	-	50	-	MHz	$V_{CE} =- 5V$, $I_C =- 10mA$
Out Capacitance 输出电容	C_{ob}	-	15	-	pF	$V_{CB} =- 10V, I_E = 0$, $f = 1MHz$

[3] pulsed; $t_p \leq 300\mu s$; $\delta \leq 0.02$. 测量时脉冲宽度≤ 300 μ s，占空比≤ 0.02。

© JPHL 2025. All rights reserved

10. Typical Electrical Characteristics Curve 典型电特性曲线

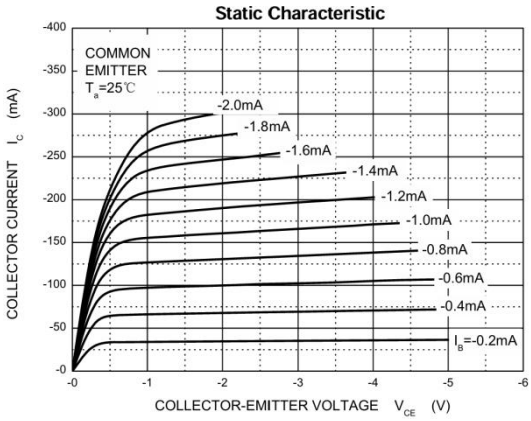

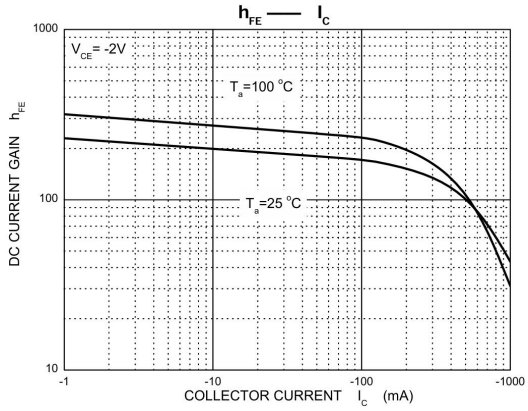

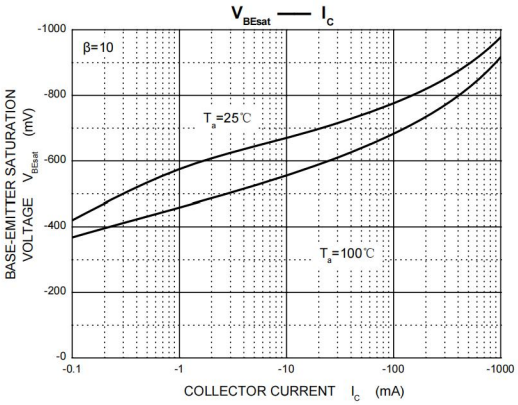

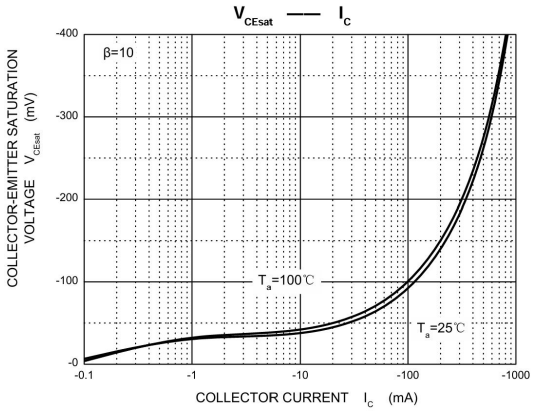

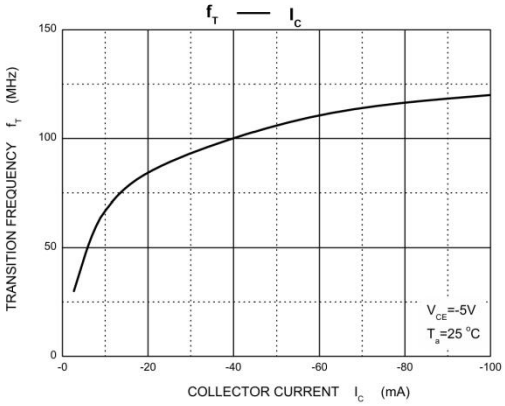

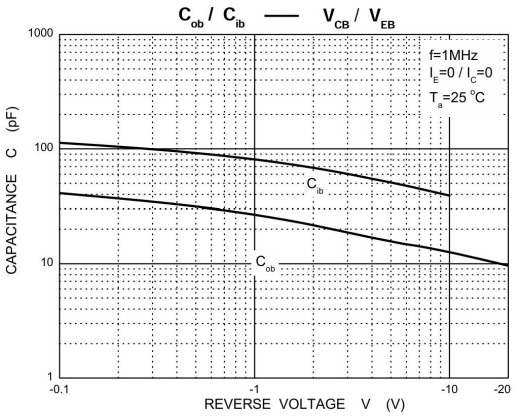

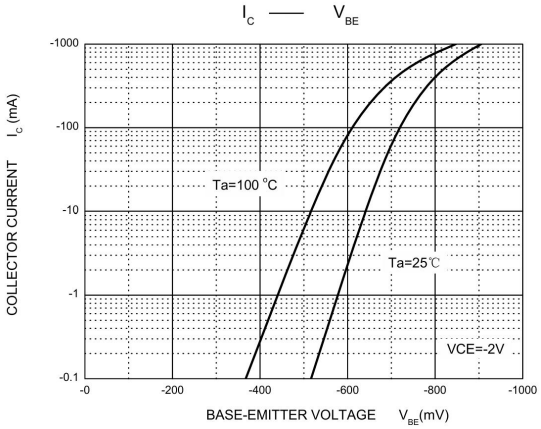

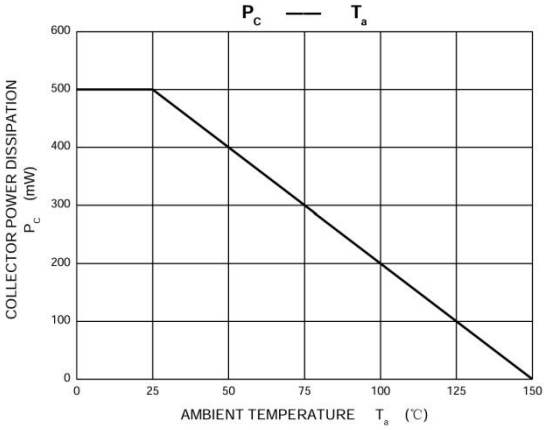

© JPHL 2025. All rights reserved

11. Package Outline Dimensions 封装外形尺寸

SOT-89

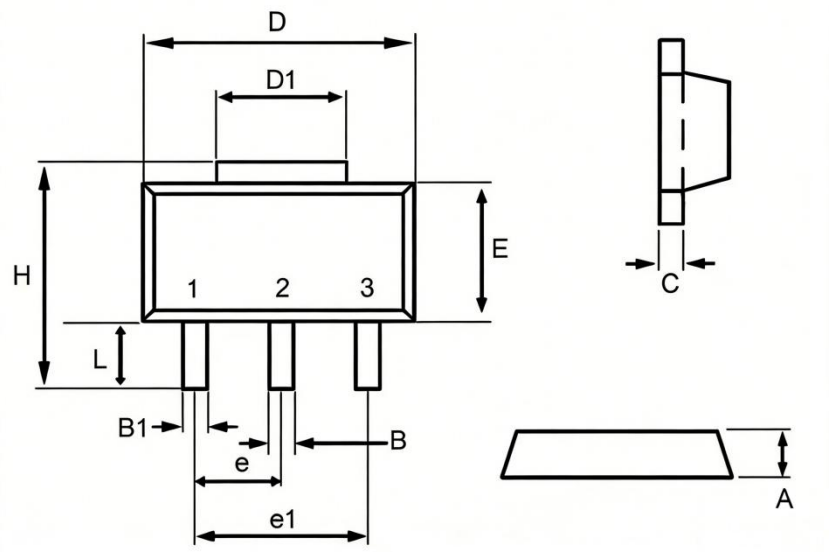

Symbol 符号	Millimeters 毫米	
	Min.最小值	Max.最大值
A	1.40	1.60
B	0.40	0.56
B1	0.35	0.48
C	0.35	0.44
D	4.40	4.60
D1	1.35	1.83
e	1.45	1.55
e1	2.95	3.05
E	2.29	2.60
H	3.75	4.25
L	0.80	1.20

© JPHL 2025. All rights reserved

12. Suggested Pad Layout 推荐焊盘布局

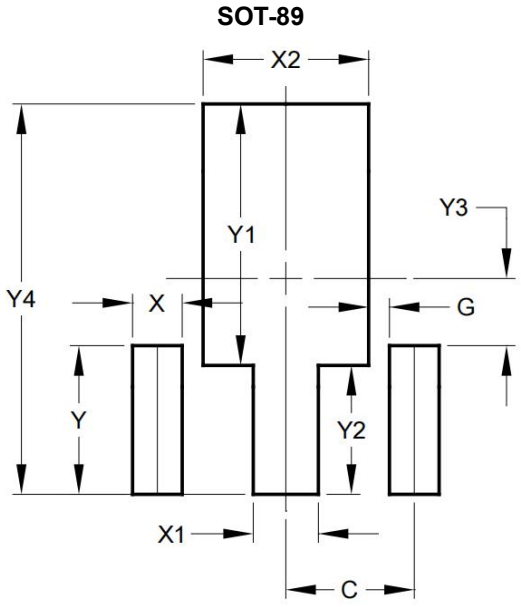

Fig. Soldering footprint for SOT-89

图 SOT-89 的引脚焊接

Dimensions 尺寸	Millimeters 毫米
C	1.500
G	0.244
X	0.580
X1	0.760
X2	1.933
Y	1.730
Y1	3.030
Y2	1.500
Y3	0.770
Y4	4.530

© JPHL 2025. All rights reserved

Important Notice 重要通知

Jingpeng Hulian(‘JPHL’) company make no warranty of any kind,express or implied,with regards to any information contained in this document.Including,but not limited to, the implied warranties of the accuracy, completeness, merchantability, or non-infringement of third party intellectual property rights.
京鹏沪连公司(以下简称“JPHL”)对本文件包含的所有信息不提供任何明示或默认的担保，包括但不限于关于信息的准确性、完整性、适销性，以及不侵犯第三方知识产权的默认保证。

The Information contained herein is for informational purpose only and is provided only to illustrate the operation of JPHL products described herein and application examples. JPHL does not assume any liability arising out of the application or use of this document or any product described herein.
本文件内容仅作信息参考，仅用于说明文中所述 JPHL 产品的操作方法及应用示例。JPHL 不承担因应用或使用本文件或本文件中描述的任何产品而产生的任何责任。

JPHL reserves the right to make changes to information published in this document, at any time and without notice. This document supersedes and replaces all information supplied prior to the publication hereof.
JPHL 保留随时修改本文件已发布信息的权利，且不另行通知，本文件将取代并替换其发布前提供的所有相关信息。

All referenced brands, product names, service names and trademarks are the property of their respective owners.
本文提及的所有品牌、产品名称、服务名称和商标，均归属其各自所有者。

© JPHL 2025. All rights reserved

Contents 目录

1. Description 描述 1
2. Features 特性 1
3. Mechanical Data 封装数据 2
4. Ordering Information 订购信息 2
5. Marking Information 丝印信息 2
6. Absolute Maximum Ratings(T_a =+ 25℃) 绝对最大额定值 3
7. Thermal Characteristics(T_a =+ 25℃) 热特性 3
8. ESD Ratings ESD 评级 3
9. Electrical Characteristics(T_a =+ 25℃) 电特性 4
10. Typical Electrical Characteristics Curve 典型电特性曲线 5
11. Package Outline Dimensions 封装外形尺寸 6
12. Suggested Pad Layout 推荐焊盘布局 7
Important Notice 重要通知 8

© JPHL. 2025. All rights reserved

For more information, please visit: www.jphl-semi.com

For business cooperation, please send an email to: sales@jphl-semi.com

Date of release: 26 Dec 2025

©京鹏沪连. 2025. 版权所有

想了解更多信息，请访问 www.jphl-semi.com

商务合作请发送电子邮件至 sales@jphl-semi.com

发布日期：2025-12-26

© JPHL 2025. All rights reserved